# ARCADIA INC.

## *IPWS 512 HD SERIES DOOR (WZ3) (IMPACT)*

INSTALLATION NOTES:

1. ONE (1) INSTALLATION ANCHOR IS REQUIRED AT EACH ANCHOR LOCATION SHOWN.
2. THE NUMBER OF INSTALLATION ANCHORS DEPICTED IS THE MINIMUM NUMBER OF ANCHORS TO BE USED FOR PRODUCT INSTALLATION.
3. INSTALL INDIVIDUAL INSTALLATION ANCHORS WITHIN A TOLERANCE OF ±1/2 INCH OF THE DEPICTED LOCATION IN THE ANCHOR LAYOUT DETAIL (I.E., WITHOUT CONSIDERATION OF TOLERANCES). TOLERANCES ARE NOT CUMULATIVE FROM ONE INSTALLATION ANCHOR TO THE NEXT.
4. SHIM AS REQUIRED AT EACH INSTALLATION ANCHOR WITH LOAD BEARING SHIM(S). MAXIMUM ALLOWABLE SHIM STACK TO BE 1/4 INCH. SHIM WHERE SPACE OF 1/16 INCH OR GREATER OCCURS. SHIM(S) SHALL BE CONSTRUCTED OF HIGH DENSITY PLASTIC OR BETTER.
5. FOR INSTALLATION INTO WOOD FRAMING USE 1/4 INCH *WOOD SCREWS* OF SUFFICIENT LENGTH TO ACHIEVE 1 1/2 INCH MINIMUM EMBEDMENT INTO WOOD SUBSTRATE.
6. FOR INSTALLATION THROUGH 1X BUCK TO CONCRETE/MASONRY, OR DIRECTLY INTO CONCRETE/MASONRY, USE *1/4 INCH DIAMETER ITW TAPCONS* OF SUFFICIENT LENGTH TO ACHIEVE 1 1/2 INCH MINIMUM EMBEDMENT.
7. FOR INSTALLATION THROUGH METAL FRAME USE *1/4"-20 SELF-DRILLING SCREW* OF SUFFICIENT LENGTH TO ACHIEVE *3 THREADS* MINIMUM PENETRATION BEYOND METAL FRAME SUBSTRATE.
8. FOR INSTALLATION THROUGH ALUMINUM MULLION USE *1/4"-20 SELF-DRILLING SCREW* OF SUFFICIENT LENGTH TO ACHIEVE *3 THREADS* MINIMUM PENETRATION BEYOND ALUMINUM FRAME SUBSTRATE.
9. MINIMUM EMBEDMENT AND EDGE DISTANCE EXCLUDE WALL FINISHES, INCLUDING BUT NOT LIMITED TO STUCCO, FOAM, BRICK VENEER, AND SIDING.
10. INSTALLATION ANCHORS AND ASSOCIATED HARDWARE MUST BE MADE OF CORROSION RESISTANT MATERIAL OR HAVE A CORROSION RESISTANT COATING.
11. FOR HOLLOW BLOCK AND GROUT FILLED BLOCK, DO NOT INSTALL INSTALLATION ANCHORS INTO MORTAR JOINTS. EDGE DISTANCE IS MEASURED FROM FREE EDGE OF BLOCK OR EDGE OF MORTAR JOINT INTO FACE SHELL OF BLOCK.
12. INSTALLATION ANCHORS SHALL BE INSTALLED IN ACCORDANCE WITH ANCHOR MANUFACTURER'S INSTALLATION INSTRUCTIONS, AND ANCHORS SHALL NOT BE USED IN SUBSTRATES WITH STRENGTHS LESS THAN THE MINIMUM STRENGTH SPECIFIED BY THE ANCHOR MANUFACTURER.
13. INSTALLATION ANCHOR CAPACITIES FOR PRODUCTS HEREIN ARE BASED ON SUBSTRATE MATERIALS WITH THE FOLLOWING PROPERTIES:
    A. WOOD - MINIMUM SPECIFIC GRAVITY OF 0.55.
    B. CONCRETE -MINIMUM COMPRESSIVE STRENGTH OF 3000 PSI.
    C. MASONRY - STRENGTH CONFORMANCE TO ASTM C-90.
    D. STEEL - MINIMUM YIELD STRENGTH OF 33 KSI. MINIMUM 18 GA. WALL THICKNESS.
    E. ALUMINUM - MINIMUM 1/8 INCH THICK 6063-T5 ALUMINUM.

GENERAL NOTES:

1. THE PRODUCT SHOWN HEREIN IS DESIGNED AND MANUFACTURED TO COMPLY WITH THE CURRENT FLORIDA BUILDING CODE (FBC), **EXCLUDING** HVHZ AND HAS BEEN EVALUATED ACCORDING TO THE FOLLOWING:
    - ASTM E1886-13a
    - ASTM E1996-17
    - ASTM E330-14
2. ADEQUACY OF THE EXISTING STRUCTURAL CONCRETE/MASONRY, 2X FRAMING AND METAL STUD FRAMING AS A MAIN WIND FORCE RESISTING SYSTEM CAPABLE OF WITHSTANDING AND TRANSFERRING APPLIED PRODUCT LOADS TO THE FOUNDATION IS THE RESPONSIBILITY OF THE ENGINEER OR ARCHITECT OF RECORD FOR THE PROJECT OF INSTALLATION.
3. 1X AND 2X BUCKS (WHEN USED) SHALL BE DESIGNED AND ANCHORED TO PROPERLY TRANSFER ALL LOADS TO THE STRUCTURE. BUCK DESIGN AND INSTALLATION IS THE RESPONSIBILITY OF THE ENGINEER OR ARCHITECT OF RECORD FOR THE PROJECT OF INSTALLATION.
4. THE INSTALLATION DETAILS DESCRIBED HEREIN ARE GENERIC AND MAY NOT REFLECT ACTUAL CONDITIONS FOR A SPECIFIC SITE. IF SITE CONDITIONS CAUSE INSTALLATION TO DEVIATE FROM THE REQUIREMENTS DETAILED HEREIN, A LICENSED ENGINEER OR ARCHITECT SHALL PREPARE SITE SPECIFIC DOCUMENTS FOR USE WITH THIS DOCUMENT.
5. APPROVED IMPACT PROTECTIVE SYSTEM **IS NOT REQUIRED** ON THIS PRODUCT IN AREAS REQUIRING IMPACT RESISTANCE IN WIND ZONES 3 OR LESS.
6. APPROVED IMPACT PROTECTIVE SYSTEM **IS REQUIRED** ON THIS PRODUCT IN AREAS REQUIRING IMPACT RESISTANCE IN WIND ZONE 4.
7. DOOR FRAME MATERIAL: ALUMINUM 6063-T5
8. ALL STRUCTURAL MATERIALS & DISSIMILIAR METALS SHALL BE PROTECTED, TREATED, PAINTED, COATED, AND/OR ISOLATED AS REQUIRED IN THE APPLICABLE SECTIONS OF THE CURRENT FLORIDA BUILDING CODE AND REFERENCED DESIGN SPECIFICATIONS.
9. GLASS SHALL MEET THE REQUIREMENTS OF ASTM E 1300 GLASS CHARTS. SEE SHEET 3 FOR GLAZING DETAIL.

TABLE OF CONTENTS


| SHEET | SHEET DESCRIPTION |
|---|---|
| 1 | INSTALLATION & GENERAL NOTES |
| 2 | ELEVATION, ANCHOR LAYOUT, & ANCHOR TYPES |
| 3 | GLAZING DETAIL |
| 4 | VERTICAL SECTIONS |
| 5 | HORIZONTAL SECTIONS |
| 6 | BILL OF MATERIALS & COMPONENTS |


DESIGN PRESSURE TABLE

| MAX. FRAME SIZE | MAX. DP | IMPACT RATING |
|---|---|---|
| 41 13/16" X 83 3/16" | +96/-50 PSF | LMI & SMI |

NOTES:
1. DOOR NOT RATED FOR WATER INFILTRATION. DOOR ASSEMBLIES INSTALLED WHERE THE OVERHANG (OH) RATIO IS EQUAL TO OR MORE THAN 1 NEED NOT TO BE TESTED FOR WATER INFILTRATION.
2. OH RATIO= OH LENGTH/OH HEIGHT


arcadia®
ARCADIA, INC.
2301 EAST VERNON AVE.
VERNON, CA 90058
PH: (323)771-9819


TITLE: *IPWS 512 HD SERIES DOOR (WZ3) (IMPACT)*
INSTALLATION & GENERAL NOTES


PREPARED BY:
BUILDING DROPS, INC.
398 E. DANIA BEACH BLVD., STE. 338
DANIA BEACH, FL 33004
PH: (954)399-8478
FAX: (954)744.4738
WEB: www.buildingdrops.com


| REMARKS | BY | DATE |
|---|---|---|
| | | |
| | | |
| | | |
| | | |

THE INSTALLATION DETAILS DESCRIBED HEREIN ARE GENERIC AND MAY NOT REFLECT ACTUAL CONDITIONS FOR A SPECIFIC SITE. IF SITE CONDITIONS CAUSE INSTALLATION TO DEVIATE FROM THE REQUIREMENTS DETAILED HEREIN, A LICENSED ENGINEER OR ARCHITECT SHALL PREPARE SITE SPECIFIC DOCUMENTS FOR USE WITH THIS DOCUMENT

Digitally signed by Hermes F Norero
Reason: I am approving this document
Date: 2022.02.15 22:20:48 -05'00'

HERMES F. NORERO
LICENSE
No. 73778
STATE OF FLORIDA
PROFESSIONAL ENGINEER


HERMES F. NORERO, P.E.
FLORIDA P.E. No 73778
BUILDING DROPS, INC
398 E. DANIA BEACH BLVD. # 338
DANIA BEACH, FL 33004
FBPE CERT. OF AUTHORIZATION No. 29578


FL #: FL40955

DATE: 02.07.22

DWG. BY: R.P.

CHK. BY: HFN

SCALE: NTS

DWG. #: ARC005

SHEET: 1 OF 6


2/15/2022 11:13 AM
s:\projects\arcadia, inc\fbc-22-0129.1 - fbc submittal - tc470 aluminum storefront, opg1900 curtain wall system, t200 casement window, ws512 entrance door, ms362 entrance door\dwgs\ws-512 entrance door\arc005.dwg

| DESIGN PRESSURE (PSF) | | | |
|---|---|---|---|
| NOMINAL DIMS. | | "X" CONFIGURATION | |
| FRAME WIDTH 'in.' | FRAME HEIGHT 'in.' | EXT. (+) | INT. (-) |
| 28.0 | 66.0 | 96.0 | 50.0 |
| 34.0 | | 96.0 | 50.0 |
| 40.0 | | 96.0 | 50.0 |
| 46.0 | | 77.0 | 43.6 |
| 48.0 | | 70.1 | 41.8 |
| 28.0 | 72.0 | 96.0 | 50.0 |
| 34.0 | | 96.0 | 50.0 |
| 40.0 | | 96.0 | 50.0 |
| 46.0 | | 79.6 | 43.6 |
| 28.0 | 78.0 | 96.0 | 50.0 |
| 34.0 | | 96.0 | 50.0 |
| 40.0 | | 96.0 | 50.0 |
| 43.0 | | 88.7 | 46.7 |
| 28.0 | 84.0 | 96.0 | 50.0 |
| 34.0 | | 96.0 | 50.0 |
| 40.0 | | 96.0 | 50.0 |
| 28.0 | 90.0 | 96.0 | 50.0 |
| 34.0 | | 96.0 | 50.0 |
| 37.0 | | 96.0 | 50.0 |
| 28.0 | 96.0 | 96.0 | 50.0 |
| 34.0 | | 96.0 | 50.0 |
| 35.0 | | 96.0 | 50.0 |
| 28.0 | 102.0 | 96.0 | 50.0 |
| 33.0 | | 96.0 | 50.0 |

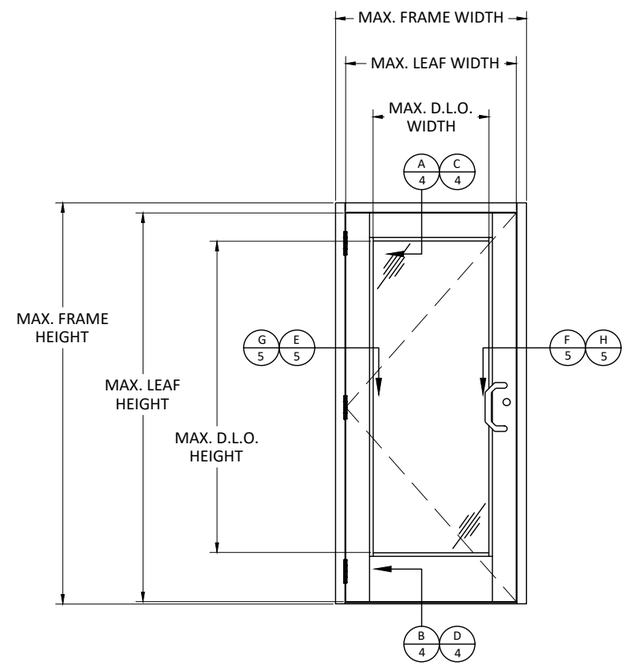


**ELEVATION**

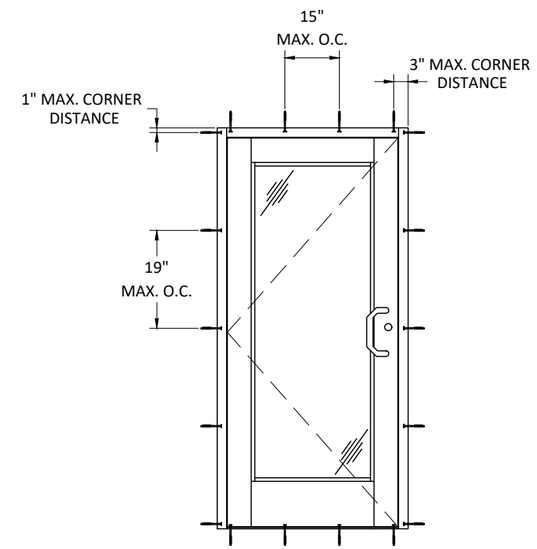


**ANCHOR LAYOUT**

D.L.O. WIDTH = FRAME WIDTH - 15.8125"
D.L.O. HEIGHT = FRAME HEIGHT - 18.875"

LEAF WIDTH = FRAME WIDTH - 4.3125"
LEAF HEIGHT = FRAME HEIGHT - 2.5625"

| WS 512 HD SERIES DOOR ANCHOR TYPES | | | | |
|---|---|---|---|---|
| ANCHOR TYPE | ANCHOR DISCRIPTION | SUBSTRATE REQUIREMENTS | MIN. EDGE DISTANCE | MIN. EMBEDMENT |
| A | 1/4" WOOD SCREW | WOOD MIN S.G. = 0.55 | 3/4" | 1-1/2" |
| B | 1/4" ITW TAPCON | CONCRETE MIN. 3000 PSI MASONRY CONFORMS TO ASTM C-90 | 2-1/2" | 1-1/2" |
| C | 1/4"-20 SELF DRILLING SCREW | STEEL MIN. YIELD STRENGTH 33 KSI, 18 GAUGE ALUMINUM MIN. 1/8" THICK 6063-T5 | 1/2" | 3 THREADS PENETRATION |


arcadia®
ARCADIA, INC.
2301 EAST VERNON AVE.
VERNON, CA 90058
PH: (323)771-9819


TITLE: *IPWS 512 HD SERIES DOOR (WZ3) (IMPACT)*

ELEVATION, ANCHOR LAYOUT, & ANCHOR TYPES


PREPARED BY:
BUILDING DROPS, INC.
398 E. DANIA BEACH BLVD., STE. 338
DANIA BEACH, FL 33004
PH: (954)399-8478
FAX: (954)744.4738
WEB: www.buildingdrops.com
BUILDING DROPS


| REMARKS | BY | DATE |
|---|---|---|
| | | |
| | | |
| | | |
| | | |

THE INSTALLATION DETAILS DESCRIBED HEREIN ARE GENERIC AND MAY NOT REFLECT ACTUAL CONDITIONS FOR A SPECIFIC SITE. IF SITE CONDITIONS CAUSE INSTALLATION TO DEVIATE FROM THE REQUIREMENTS DETAILED HEREIN, A LICENSED ENGINEER OR ARCHITECT SHALL PREPARE SITE SPECIFIC DOCUMENTS FOR USE WITH THIS DOCUMENT

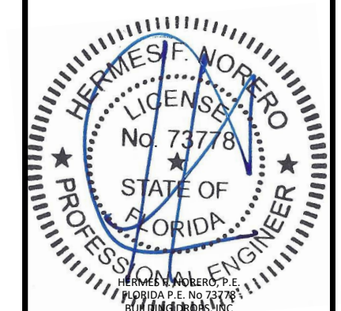



HERMES F. NORERO, P.E.
FLORIDA P.E. No 73778
BUILDING DROPS, INC
398 E. DANIA BEACH BLVD. # 338
DANIA BEACH, FL 33004
FBPE CERT. OF AUTHORIZATION No. 29578


FL #: FL40955

DATE: 02.07.22

DWG. BY: R.P.

CHK. BY: HFN

SCALE: NTS

DWG. #: ARC005

SHEET: 2 OF 6


2/15/2022 11:13 AM
s:\projects\arcadia, inc\fbc-22-0129.1 - fbc submittal - tc470 aluminum storefront, opg1900 curtain wall system, t200 casement window, ws512 entrance door, ms362 entrance door\dwgs\ws-512 entrance door\arc005.dwg

2/15/2022 11:13 AM
s:\projects\arcadia, inc\fbc-22-0129.1 - fbc submittal - tc470 aluminum storefront, obp1900 curtain wall system, t200 casement window, ws512 entrance door, ms362 entrance door\dwgs\ws-512 entrance door\arc005.dwg

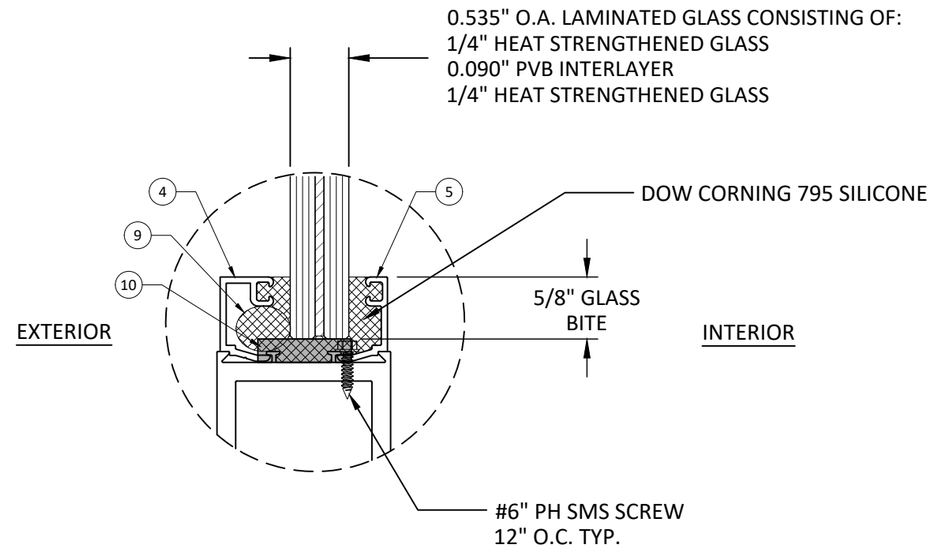


# GLAZING DETAIL
## WET GLAZED

NOTES:
1. GLASS THICKNESS AND TYPE COMPLIES WITH ASTM E 1300 GLASS CHART REQUIREMENTS.
2. ALL GLAZING CONFIGURATIONS SHALL COMPLY WITH SAFETY GLAZING REQUIREMENTS OUTLINED IN THE FBC.
3. ALL LITES GREATER THAN 36" IN WIDTH SHALL UTILIZE SETTING BLOCKS IN ACCORDANCE WITH THE FBC. CH. 24
4. SETTING BLOCK DUROMETER HARDNESS OF 70-90 (SHORE

arcadia
ARCADIA, INC.
2301 EAST VERNON AVE.
VERNON, CA 90058
PH: (323)771-9819

TITLE: *IPWS 512 HD SERIES DOOR (WZ3) (IMPACT)*

GLAZING DETAIL

PREPARED BY:
BUILDING DROPS, INC.
398 E. DANIA BEACH BLVD., STE. 338
DANIA BEACH, FL 33004
PH: (954)399-8478
FAX: (954)744.4738
WEB: www.buildingdrops.com
BUILDING DROPS

| REMARKS | BY | DATE |
|---|---|---|
| | | |
| | | |
| | | |
| | | |

THE INSTALLATION DETAILS DESCRIBED HEREIN ARE GENERIC AND MAY NOT REFLECT ACTUAL CONDITIONS FOR A SPECIFIC SITE. IF SITE CONDITIONS CAUSE INSTALLATION TO DEVIATE FROM THE REQUIREMENTS DETAILED HEREIN, A LICENSED ENGINEER OR ARCHITECT SHALL PREPARE SITE SPECIFIC DOCUMENTS FOR USE WITH THIS DOCUMENT

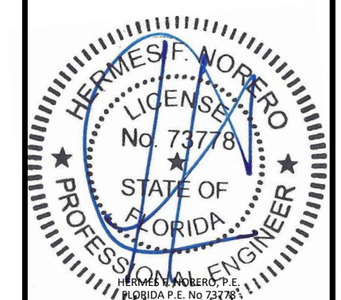


HERMES F. NORERO, P.E.
FLORIDA P.E. No 73778
BUILDING DROPS, INC
398 E. DANIA BEACH BLVD. # 338
DANIA BEACH, FL 33004
FBPE CERT. OF AUTHORIZATION No. 29578

FL #: FL40955

DATE: 02.07.22

DWG. BY: R.P.

CHK. BY: HFN

SCALE: NTS

DWG. #: ARC005

SHEET: 3 OF 6

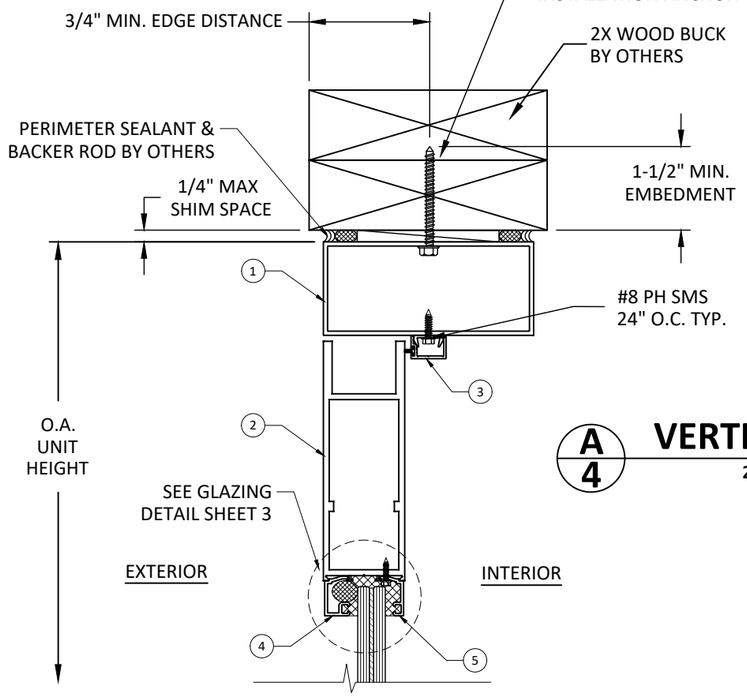


## A/4 VERTICAL SECTION

**2X WOOD BUCK**

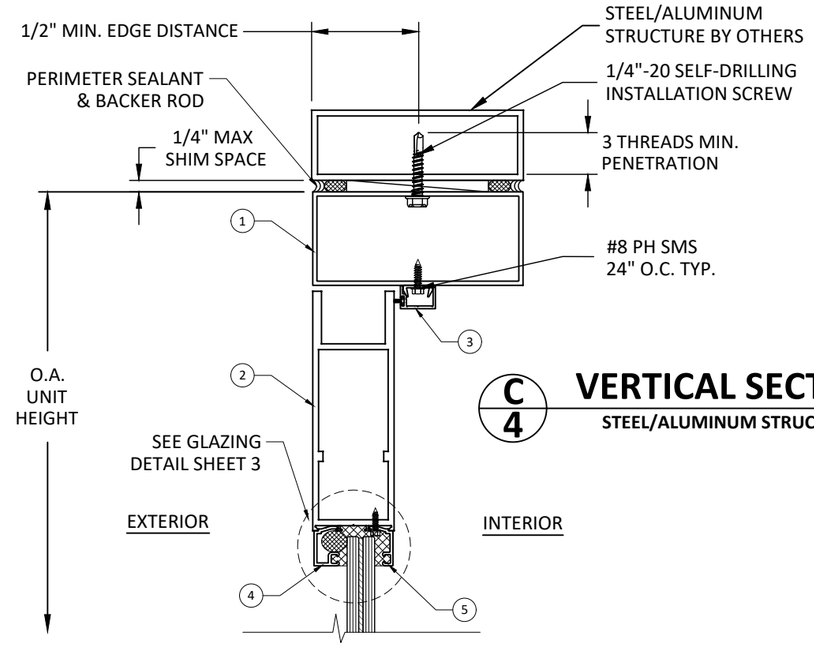


## C/4 VERTICAL SECTION

**STEEL/ALUMINUM STRUCTURE**

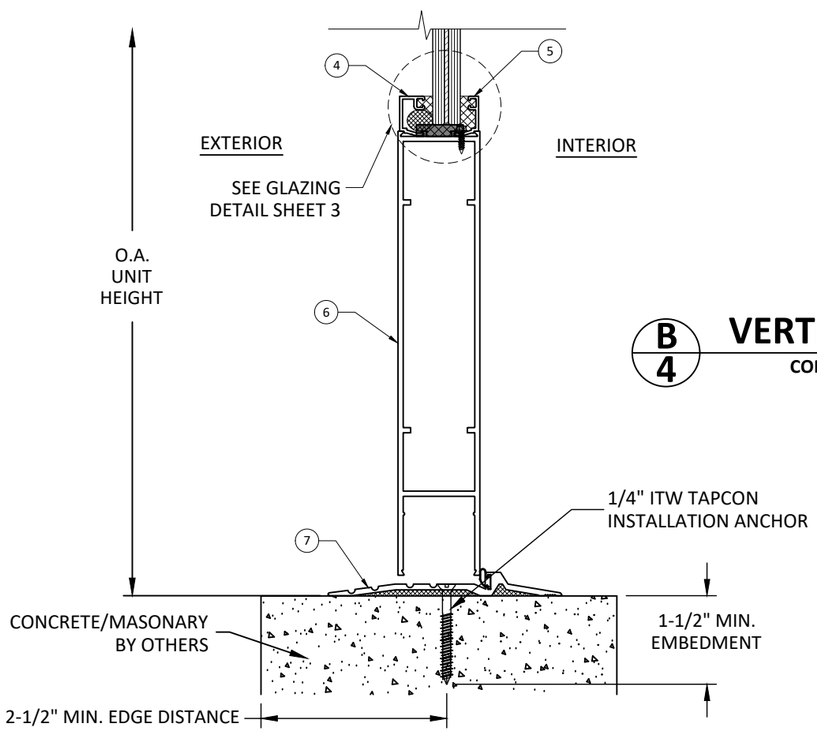


## B/4 VERTICAL SECTION

**CONCRETE/MASONRY**

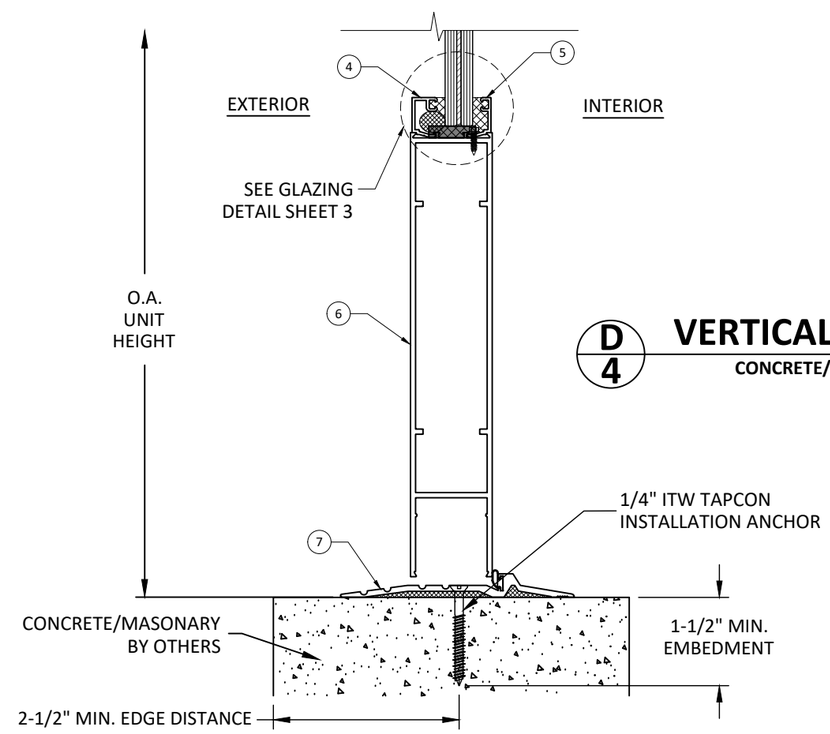


## D/4 VERTICAL SECTION

**CONCRETE/MASONRY**


arcadia

ARCADIA, INC.
2301 EAST VERNON AVE.
VERNON, CA 90058
PH: (323)771-9819


TITLE: *IPWS 512 HD SERIES DOOR (WZ3) (IMPACT)*

VERTICAL SECTIONS


PREPARED BY:
BUILDING DROPS, INC.
398 E. DANIA BEACH BLVD., STE. 338
DANIA BEACH, FL 33004
PH: (954)399-8478
FAX: (954)744.4738
WEB: www.buildingdrops.com


| REMARKS | BY | DATE |
|---|---|---|
| | | |
| | | |
| | | |
| | | |

THE INSTALLATION DETAILS DESCRIBED HEREIN ARE GENERIC AND MAY NOT REFLECT ACTUAL CONDITIONS FOR A SPECIFIC SITE. IF SITE CONDITIONS CAUSE INSTALLATION TO DEVIATE FROM THE REQUIREMENTS DETAILED HEREIN, A LICENSED ENGINEER OR ARCHITECT SHALL PREPARE SITE SPECIFIC DOCUMENTS FOR USE WITH THIS DOCUMENT

HERMES F. NORERO
LICENSE
No. 73778
STATE OF
FLORIDA
PROFESSIONAL ENGINEER


HERMES F. NORERO, P.E.
FLORIDA P.E. No 73778
BUILDING DROPS, INC
398 E. DANIA BEACH BLVD. # 338
DANIA BEACH, FL 33004
FBPE CERT. OF AUTHORIZATION No. 29578


FL #: FL40955

DATE: 02.07.22

DWG. BY: R.P.

CHK. BY: HFN

SCALE: NTS

DWG. #: ARC005

SHEET: 4 OF 6


2/15/2022 11:13 AM

s:\projects\arcadia, inc\fbc-22-0129.1 - fbc submittal - tc470 aluminum storefront, opg1900 curtain wall system, t200 casement window, ws512 entrance door, ms362 entrance door\dwgs\ws-512 entrance door\arc005.dwg

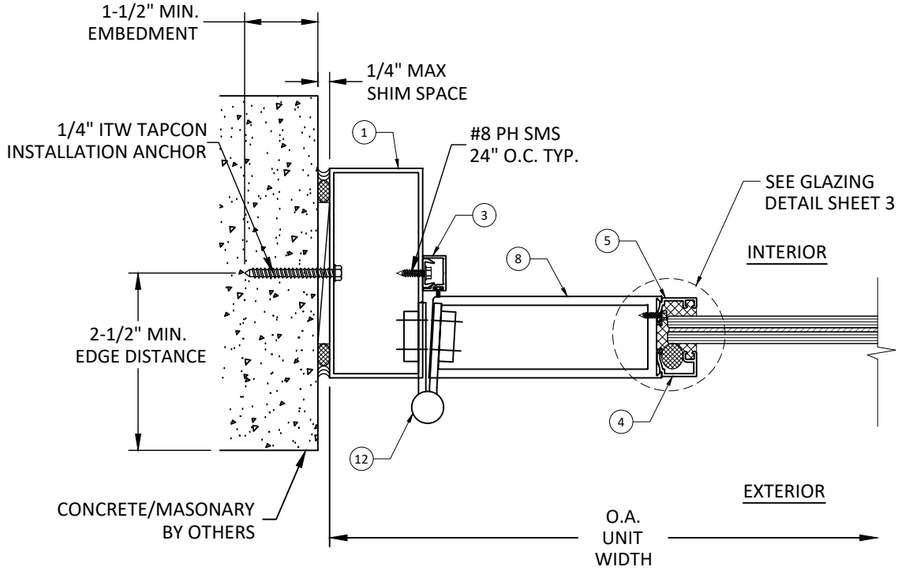


## E/5 HORIZONTAL SECTION

**HINGE JAMB**
**CONCRETE/MASONRY**

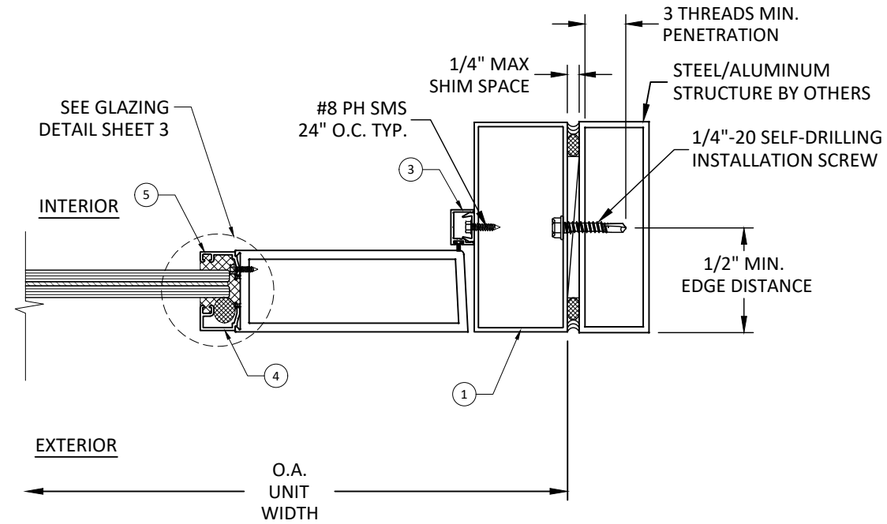


## F/5 HORIZONTAL SECTION

**LOCK JAMB**
**STEEL/ALUMINUM STRUCTURE**

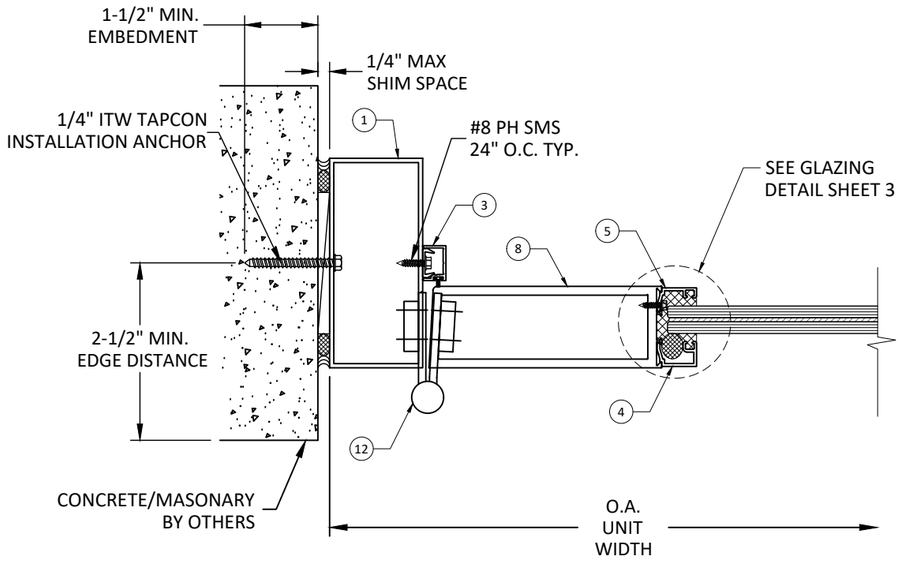


## G/5 HORIZONTAL SECTION

**HINGE JAMB**
**CONCRETE/MASONRY**

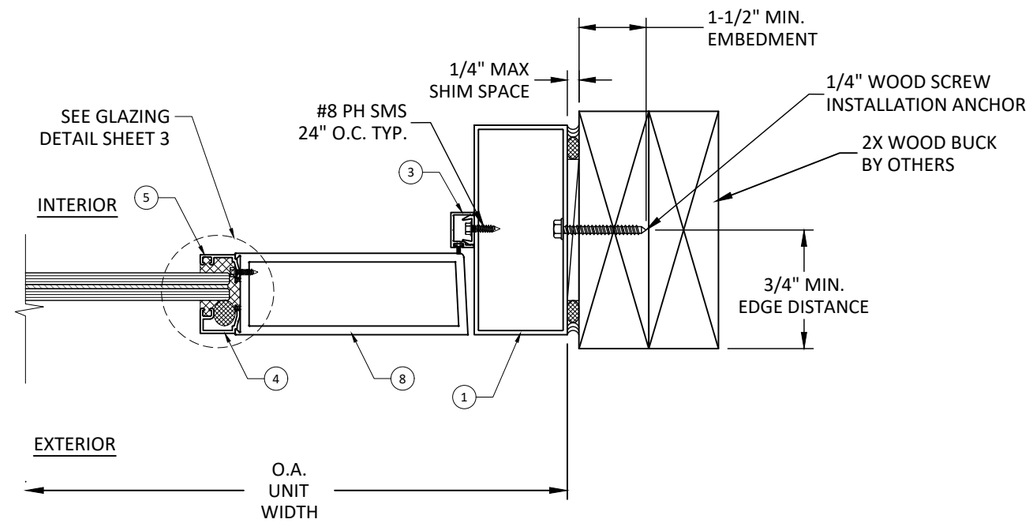


## H/5 HORIZONTAL SECTION

**LOCK JAMB**
**2X WOOD BUCK**


arcadia®
ARCADIA, INC.
2301 EAST VERNON AVE.
VERNON, CA 90058
PH: (323)771-9819


TITLE: *IPWS 512 HD SERIES DOOR (WZ3) (IMPACT)*

HORIZONTAL SECTIONS


PREPARED BY:
BUILDING DROPS, INC.
398 E. DANIA BEACH BLVD., STE. 338
DANIA BEACH, FL 33004
PH: (954)399-8478
FAX: (954)744.4738
WEB: www.buildingdrops.com
BUILDING DROPS


| REMARKS | BY | DATE |
|---|---|---|
| | | |
| | | |
| | | |
| | | |


THE INSTALLATION DETAILS DESCRIBED HEREIN ARE GENERIC AND MAY NOT REFLECT ACTUAL CONDITIONS FOR A SPECIFIC SITE. IF SITE CONDITIONS CAUSE INSTALLATION TO DEVIATE FROM THE REQUIREMENTS DETAILED HEREIN, A LICENSED ENGINEER OR ARCHITECT SHALL PREPARE SITE SPECIFIC DOCUMENTS FOR USE WITH THIS DOCUMENT


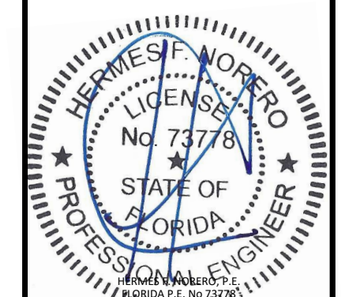



HERMES F. NOPERO, P.E.
FLORIDA P.E. No 73778
BUILDING DROPS, INC
398 E. DANIA BEACH BLVD. # 338
DANIA BEACH, FL 33004
FBPE CERT. OF AUTHORIZATION No. 29578


FL #: FL40955

DATE: 02.07.22

DWG. BY: R.P. | CHK. BY: HFN

SCALE: NTS

DWG. #: ARC005

SHEET: 5 OF 6


2/15/2022 11:13 AM
s:\projects\arcadia, inc\fbc-22-0129.1 - fbc submittal - tc470 aluminum storefront, opg1900 curtain wall system, t200 casement window, ws512 entrance door, ms362 entrance door\dwgs\ws-512 entrance door\arc005.dwg

| WS 512 HD ENTRANCE DOOR BILL OF MATERIALS | | | | |
|---|---|---|---|---|
| ITEM # | PART # | DESCRIPTION | MATERIAL | MANUFACTURER |
| 1 | 245 | HEAD/JAMB | 6063-T5 | ARCADIA |
| 2 | 31-430H | TOP RAIL | 6063-T5 | ARCADIA |
| 3 | S-155 | CAP | 6063-T5 | ARCADIA |
| 4 | DS-004 | GLAZING BEAD | 6063-T6 | ARCADIA |
| 5 | DS-001 | GLAZING BEAD | 6063-T6 | ARCADIA |
| 6 | DRB-950 | BOTTOM RAIL | 6063-T5 | ARCADIA |
| 7 | TH-500 | THRESHOLD | 6063-T5 | ARCADIA |
| 8 | DSO-401H | STILE | 6063-T5 | ARCADIA |
| 9 | | BACKER ROD | | |
| 10 | | SETTING BLOCK | | |
| 11 | 1850S | DEAD BOLT | STAINLESS STEEL | |
| 12 | NRP-630 | BUTT HINGES | STAINLESS STEEL | |

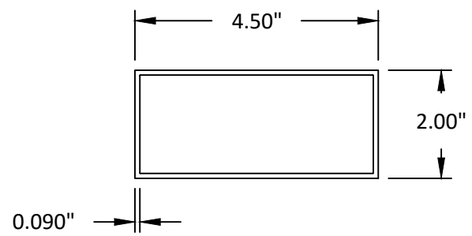


1 HEAD & JAMB

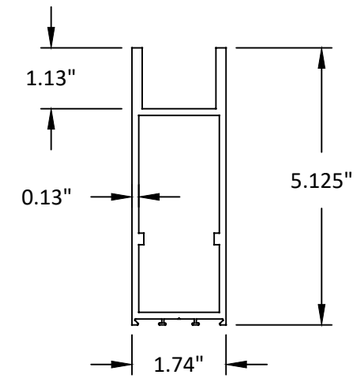


2 TOP RAIL

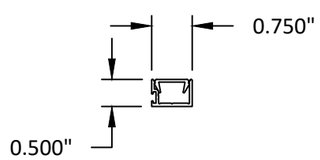


3 CAP

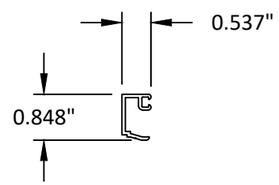


4 GLAZING BEAD

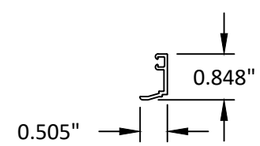


5 GLAZING BEAD

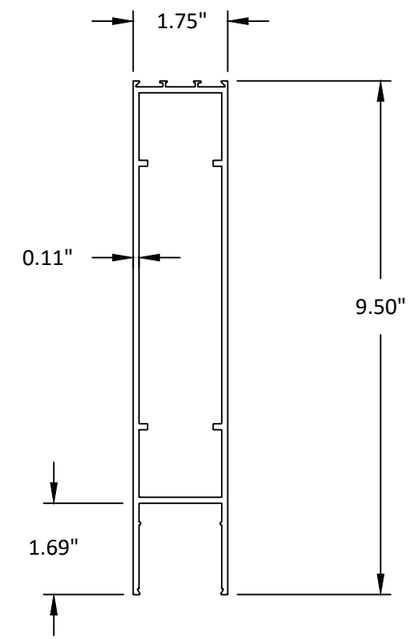


6 BOTTOM RAIL

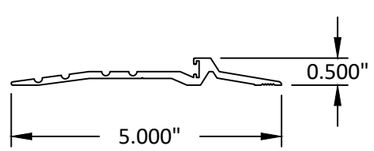


7 TRESHOLD

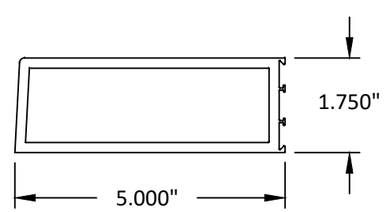


8 STILE


arcadia®
ARCADIA, INC.
2301 EAST VERNON AVE.
VERNON, CA 90058
PH: (323)771-9819


TITLE: *IPWS 512 HD SERIES DOOR (WZ3) (IMPACT)*

BILL OF MATERIALS & COMPONENTS


PREPARED BY:
BUILDING DROPS, INC.
398 E. DANIA BEACH BLVD., STE. 338
DANIA BEACH, FL 33004
PH: (954)399-8478
FAX: (954)744.4738
WEB: www.buildingdrops.com
BUILDING DROPS


| REMARKS | BY | DATE |
|---|---|---|
| | | |
| | | |
| | | |
| | | |

THE INSTALLATION DETAILS DESCRIBED HEREIN ARE GENERIC AND MAY NOT REFLECT ACTUAL CONDITIONS FOR A SPECIFIC SITE. IF SITE CONDITIONS CAUSE INSTALLATION TO DEVIATE FROM THE REQUIREMENTS DETAILED HEREIN, A LICENSED ENGINEER OR ARCHITECT SHALL PREPARE SITE SPECIFIC DOCUMENTS FOR USE WITH THIS DOCUMENT

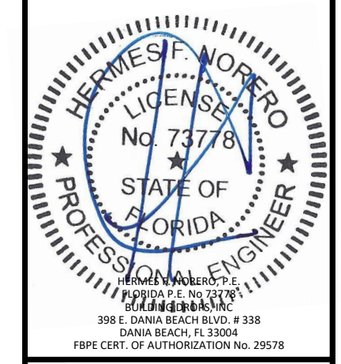


FL #: FL40955

DATE: 02.07.22

DWG. BY: R.P.

CHK. BY: HFN

SCALE: NTS

DWG. #: ARC006

SHEET: 6 OF 6


2/15/2022 11:13 AM
s:\projects\arcadia, inc\fbc-22-0129.1 - fbc submittal - tc470 aluminum storefront, opg1900 curtain wall system, t200 casement window, ws512 entrance door, ms362 entrance door\dwgs\ws-512 entrance door\arc005.dwg